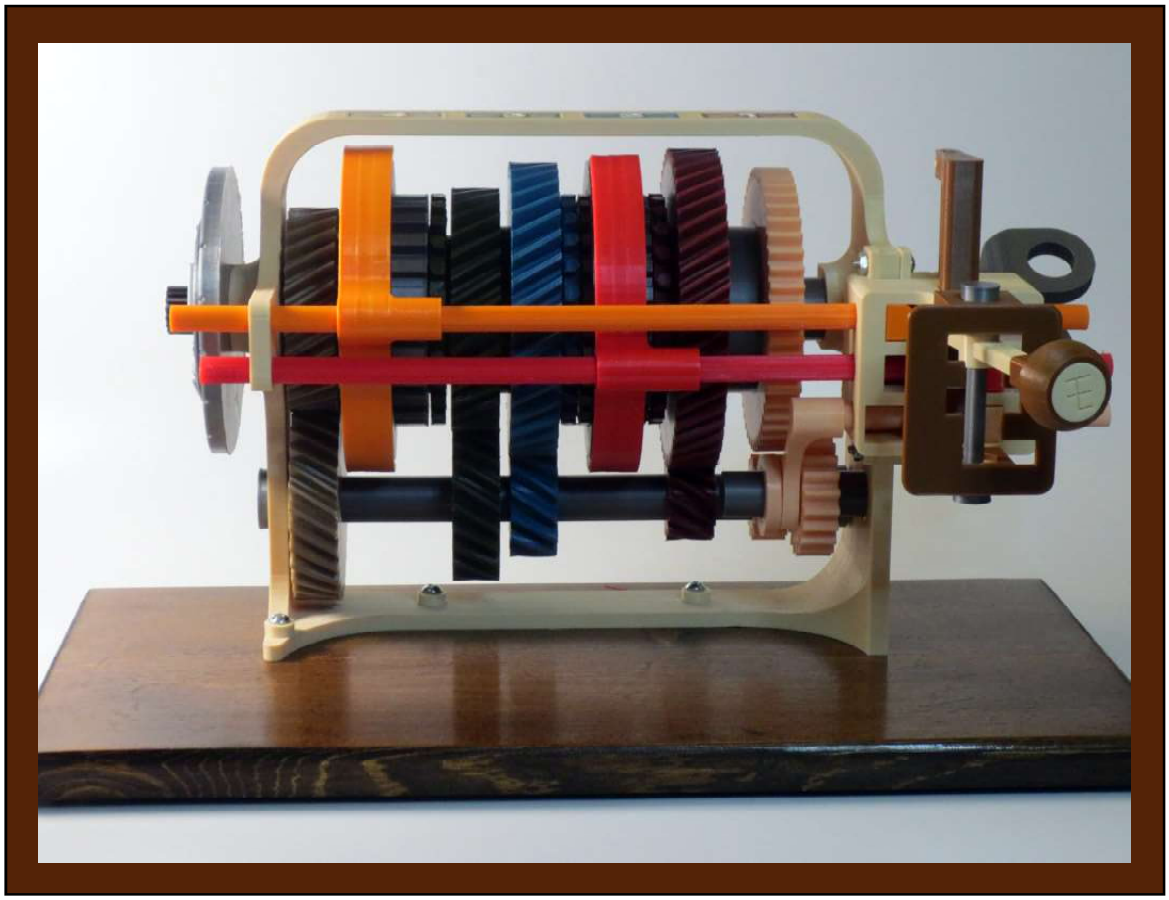

the **Transmission Thing**

by **organicap**

illustrating the working principle
of a Constant-Mesh Transmission

Contents

Parts List 3

Hardware 9

Printing Notes 10

Assembly 14

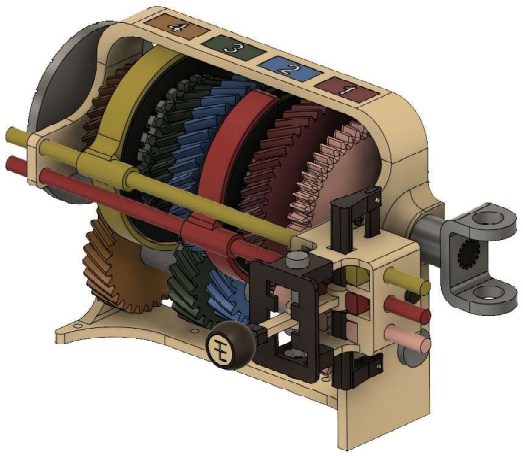

1	Assemble the Countershaft	14
2	Assemble the Clutch	15
3	Assemble the Main Gears	15
4	Assemble the Reverse Gear	16
5	Assemble the Output Shaft	16
6	Mount the Shift Cradle	17
7	Mount the Countershaft	17
8	Mount the Input Shaft	18
9	Assemble the Synchronous Hubs	18
10	Mount the Synchronous Hubs	19
11	Assemble the Reverse Selector Sleeve	20
12	Assemble the 1-2 Selector Sleeve	21
13	Assemble the 3-4 Selector Sleeve	22
14	Mount the Remaining Main Shaft Gears	23
15	Mount the Output Shaft	24
16	Assemble the Reverse Idler Gear	25
17	Assemble the Shift Guard	26
18	Assemble the Striker Rod	27
19	Assemble the Number Tiles	28

Parts List

The orientations, supports, colors and infill percentages shown are those that I use when printing the model in PLA.

S = Supports **B = Brim** **R = Raft**

01 S B

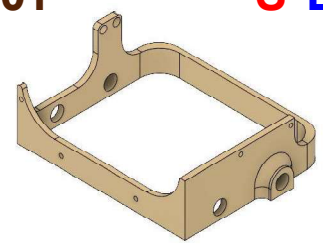

Housing
1 @ 15%

02 B

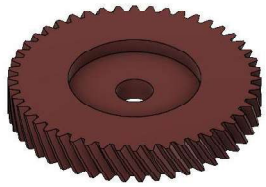

1st Gear A
1 @ 15%

03 S B

1st Gear B
1 @ 15%

04 S R

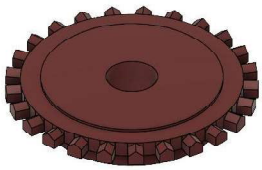

1st Gear Face
1 @ 15%

05 B

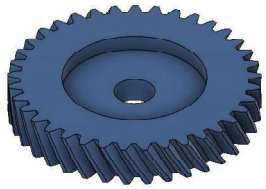

2nd Gear A
1 @ 15%

06 S

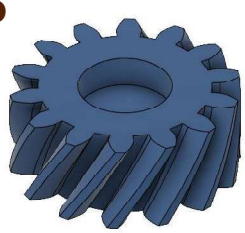

2nd Gear B
1 @ 15%

07 S R

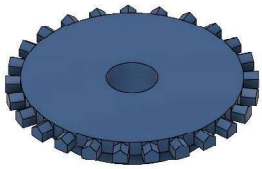

2nd Gear Face
1 @ 15%

08 S R

3rd Gear A
1 @ 15%

09 S B

3rd Gear B
1 @ 15%

S = Supports **B = Brim** **R = Raft**

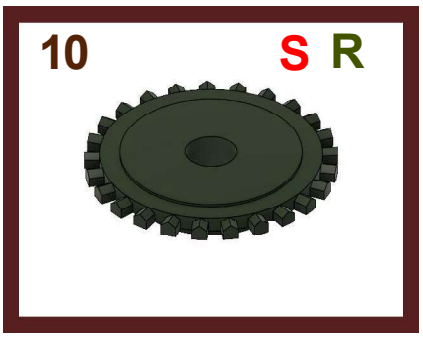

3rd Gear Face
1 @ 15%

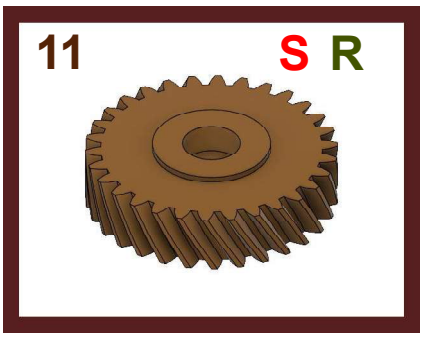

4th Gear A
1 @ 15%

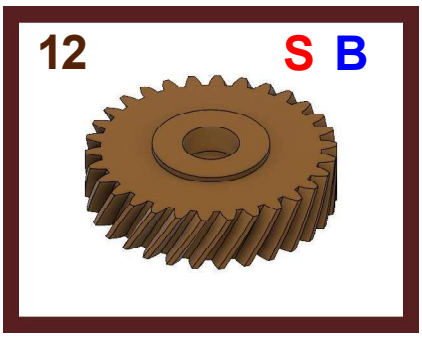

4th Gear B
1 @ 15%

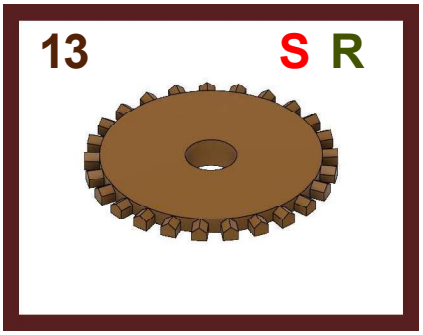

4th Gear Face
1 @ 15%

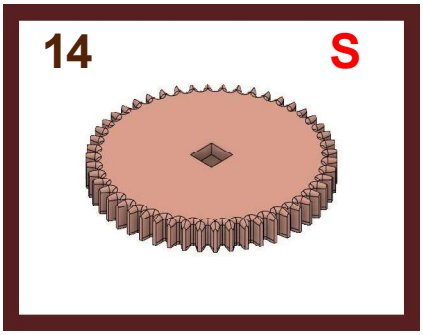

Reverse Gear A
1 @ 15%

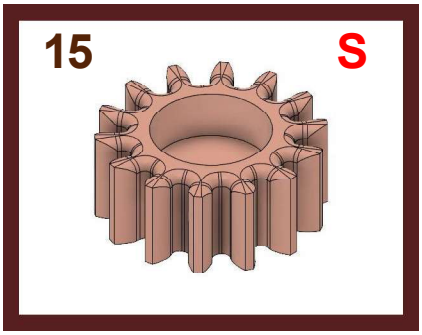

Reverse Gear B
1 @ 15%

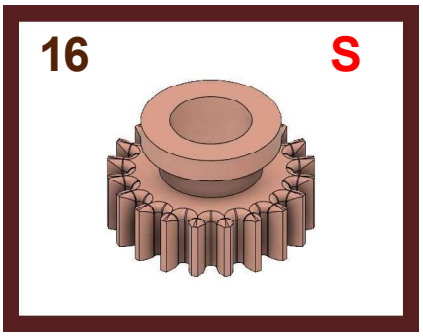

Reverse Idler Gear
1 @ 15%

Shift Sleeve
2 @ 15%

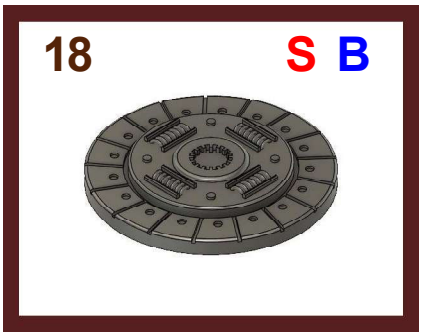

Clutch Plate
1 @ 15%

Clutch Splined Cap
1 @ 15%

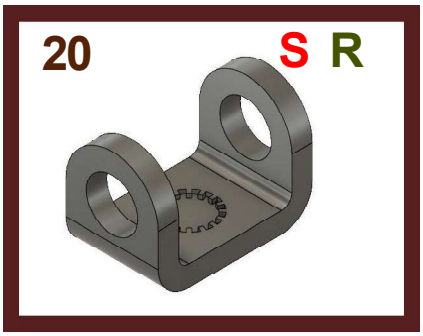

Yoke
1 @ 15%

Yoke Splined Cap
1 @ 15%

S = Supports B = Brim R = Raft

22 S

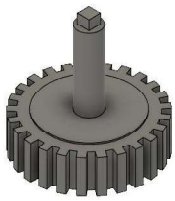

1-2 Synchro Hub
1 @ 15%

23 S B

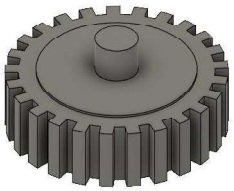

3-4 Synchro Hub
1 @ 15%

24

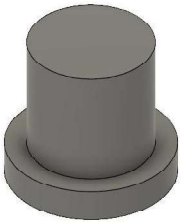

Countershaft Cap
2 @ 15%

25

1st Gear B Boss
1 @ 15%

26

2nd Gear B Boss
1 @ 15%

27

3rd Gear B Boss
1 @ 15%

28

Reverse Gear B Boss
1 @ 15%

29 S

Countershaft Spacer
1 @ 15%

30

Reverse Shaft
1 @ 15%

31

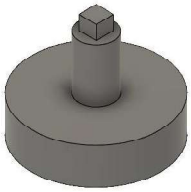

Reverse Gear Hub
1 @ 15%

32

Output Shaft
1 @ 15%

33

Input Shaft
1 @ 15%

S = Supports B = Brim R = Raft

34

Mainshaft Spacer
1 @ 15%

35 S R

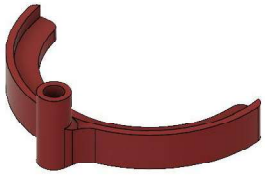

1-2 Fork
1 @ 15%

36 S R

1-2 Shift Shaft A
1 @ 50%

37 S R

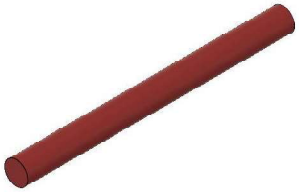

1-2 Shift Shaft B
1 @ 50%

38 S R

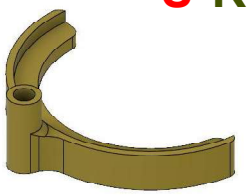

3-4 Fork
1 @ 15%

39 S R

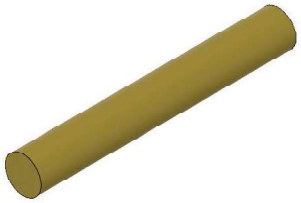

3-4 Shift Shaft A
1 @ 50%

40 S R

3-4 Shift Shaft B
1 @ 50%

41 S

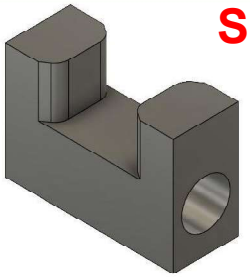

Selector Sleeve
3 @ 15% (3 colors)

42 S R

Shaft End
3 @ 50% (3 colors)

43 S B

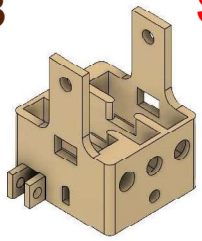

Shift Cradle
1 @ 15%

44

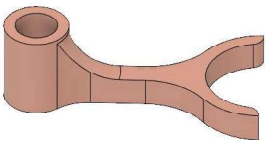

Reverse Fork
1 @ 15%

45 S R

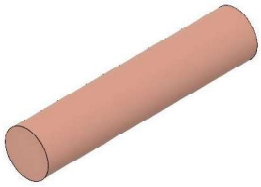

Reverse Shift Shaft
1 @ 50%

S = Supports B = Brim R = Raft

Guard Rail
1 @ 15%

Guard
2 @ 15%

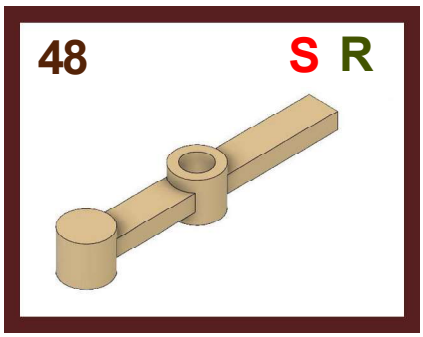

Striker Rod
1 @ 15%

Spring Plug
1 @ 15%

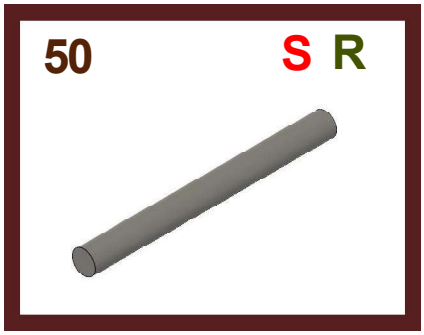

Striker Pin
1 @ 50%

Striker Pin Cap
2 @ 15%

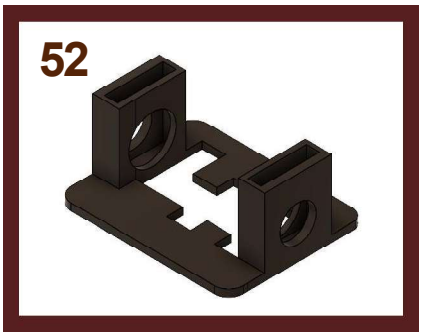

Shift Bezel
1 @ 15%

Shift Knob
1 @ 15%

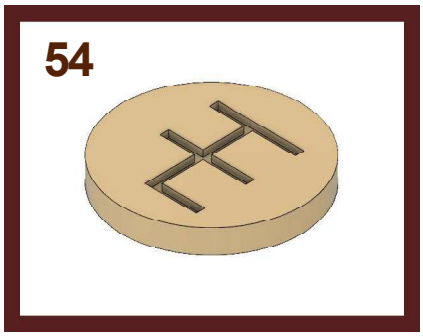

Shift Knob Cap
1 @ 15%

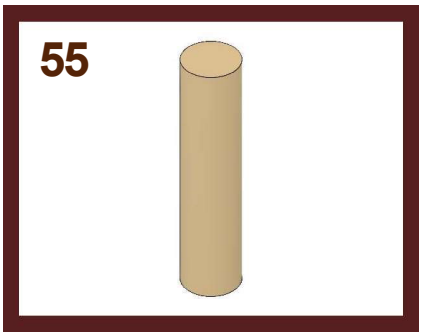

Guard Pin
2 @ 100%

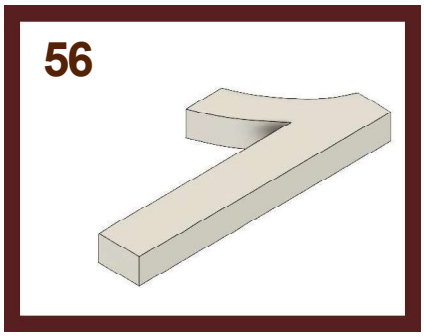

Numeral 1
1 @ 100%

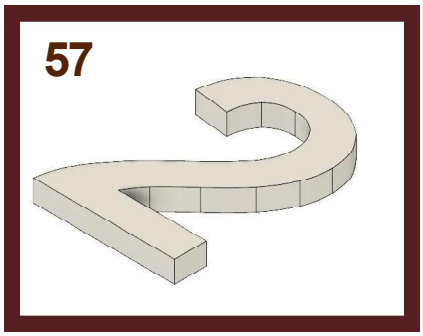

Numeral 2
1 @ 100%

S = Supports **B = Brim** **R = Raft**

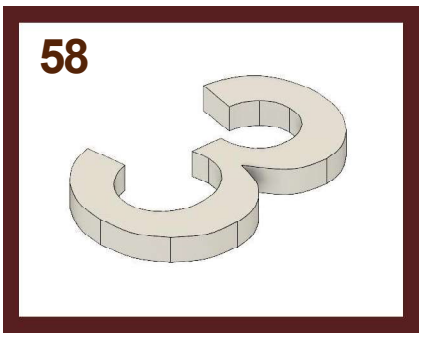

Numeral 3
1 @ 100%

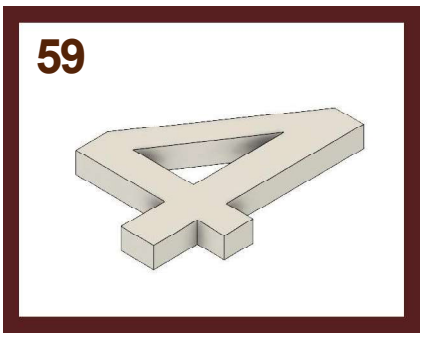

Numeral 4
1 @ 100%

Tile 1
1 @ 100%

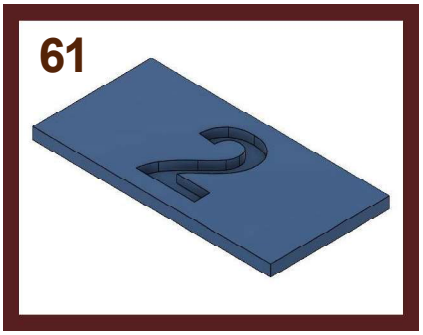

Tile 2
1 @ 100%

Tile 3
1 @ 100%

Tile 4
1 @ 100%

Hardware

64

#8 Machine Screw
2 @ 7/8”

65

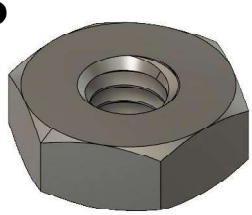

#8 Hex Nut
2

66

Bearing Ball
4 @ 1/4” Diameter

67

Compression Spring
x 4

OD: ≈ 6 mm
Free Length: ≈ 8 mm
Wire Size: ≈ .5 mm

The Machine Screws (64) and Hex Nuts (65) are used to mount the Shift Cradle (43) to the Housing (01)

The Bearing Balls (66) and Compression Springs (67) provide detents for the Selector Sleeves (41) and the Guard Rail (46)

Printing Notes

1st Gear B Boss

=

3rd Gear B Boss

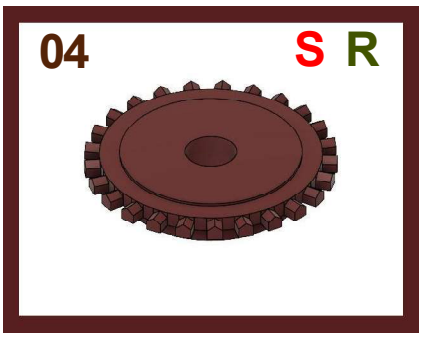

1st Gear Face

&

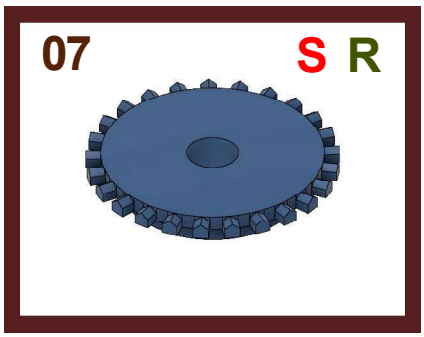

2nd Gear Face

&

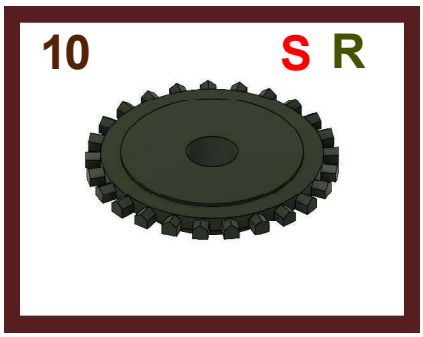

3rd Gear Face

&

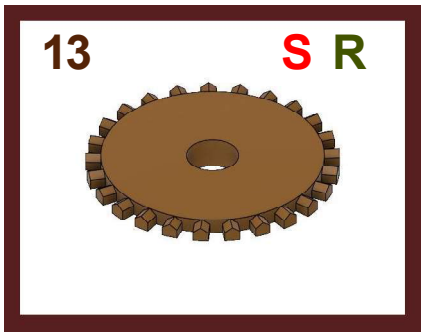

4th Gear Face

These Gear Faces are oriented such that their dog teeth and top faces print as cleanly as possible

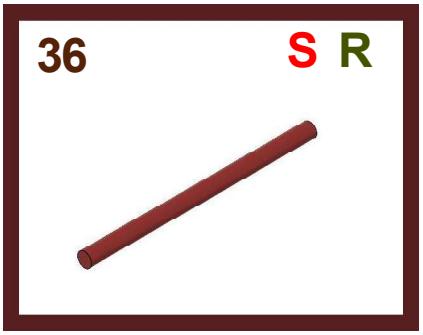

1-2 Shift Shaft A

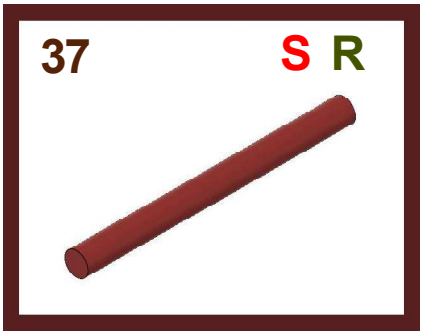

1-2 Shift Shaft B

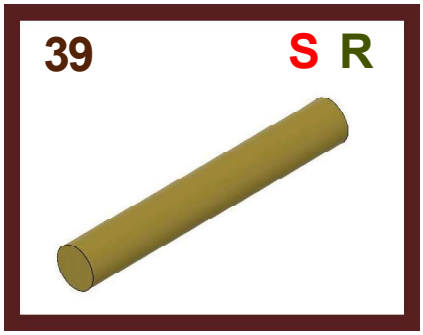

3-4 Shift Shaft A

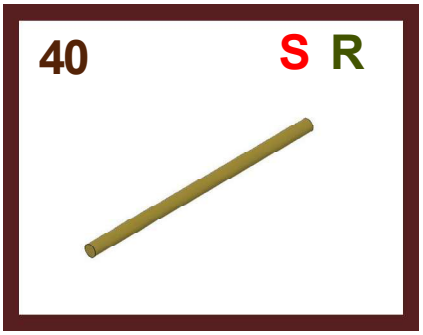

3-4 Shift Shaft B

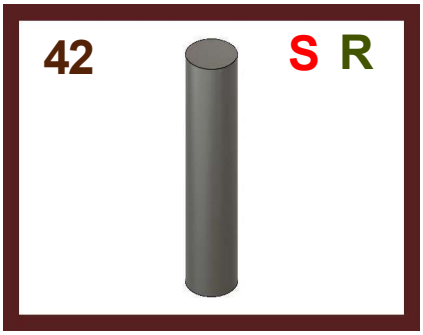

Shaft End

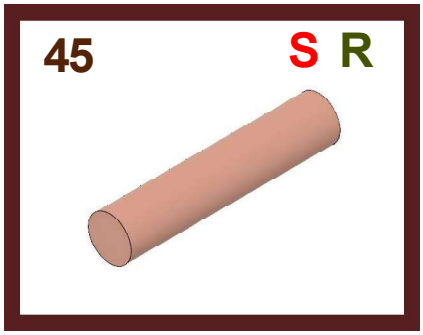

Reverse Shift Shaft

These shafts do not need to be perfectly cylindrical. They need to be rigid and tightly fit to the model. The goal is to avoid the use of glue on these.

STEP files are included so that the model maker may fine-tune the fit of the these shafts if needed:

STEP 36 1-2 Shift Shaft A.step
STEP 37 1-2 Shift Shaft B.step
STEP 39 3-4 Shift Shaft A.step
STEP 40 3-4 Shift Shaft B.step
STEP 42 Shaft End.step
STEP 45 Reverse Shift Shaft.step

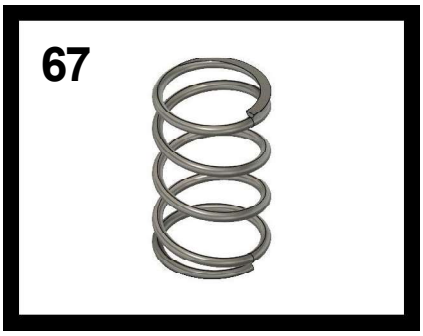

Compression Spring

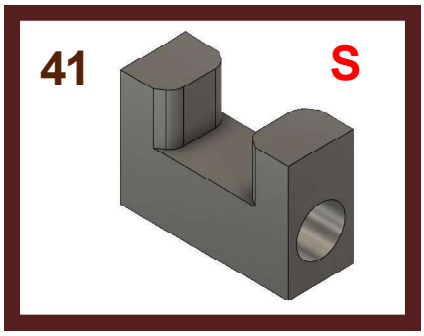

Selector Sleeve

Spring Plug

The action of the model's Compression Springs (67) can be tweaked by altering the depth of the holes on the bottom of the Selector Sleeves (41) and/or the length of the Spring Plug (49)

STEP files are included for the Selector Sleeves and the Spring Plug:

STEP 41 Selector Sleeve.step
STEP 49 Spring Plug.step

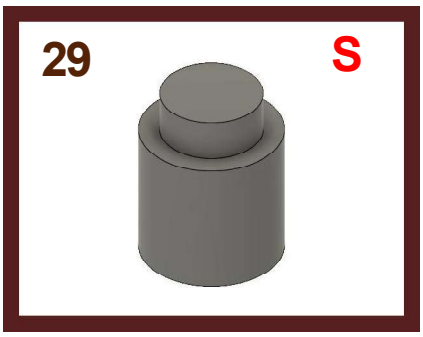

Countershaft Spacer

Mainshaft Spacer

STEP files are included for the Countershaft Spacer and the Mainshaft Spacer:

STEP 29 Countershaft Spacer.step
STEP 34 Mainshaft Spacer.step

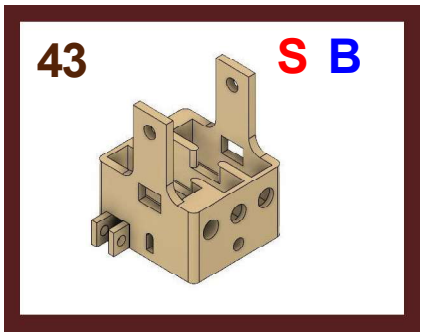

Shift Cradle

The supports used for the pathways inside the Shift Cradle (43) can be challenging to remove. I use a small pair of long-necked pliers.

Assembly

CAUTION Dry-fit the entire model ***before using any glue.*** In particular, ensure that the Countershaft parts are correctly oriented and that this gearcluster meshes well with the gears on the Main Shaft

A gluing error on this step would require a lot of reprinting to correct

1. Assemble the Countershaft

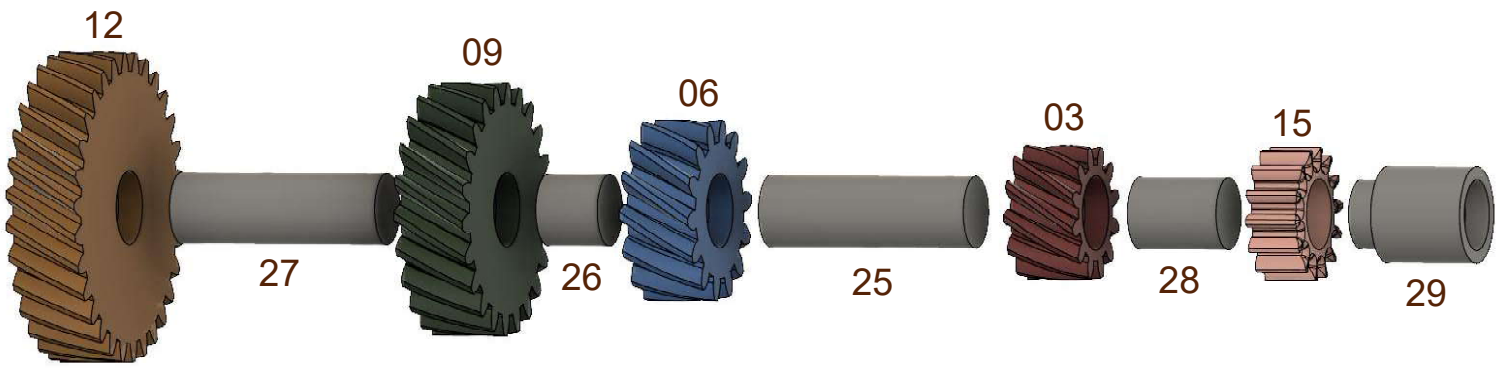

The shafts and the middle three gears have no left or right sides. They are symmetrical about their own Z axes

Reverse Gear B (15) has bevelled teeth and a deeper recess on its side that faces the Countershaft Spacer (29)

Glue each of these parts, creating a single gearcluster

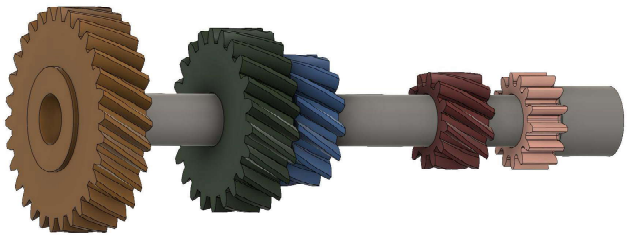

2. Assemble the Clutch

Glue the Clutch Splined Cap (19) to the Clutch Plate (18)

3. Assemble the Main Gears

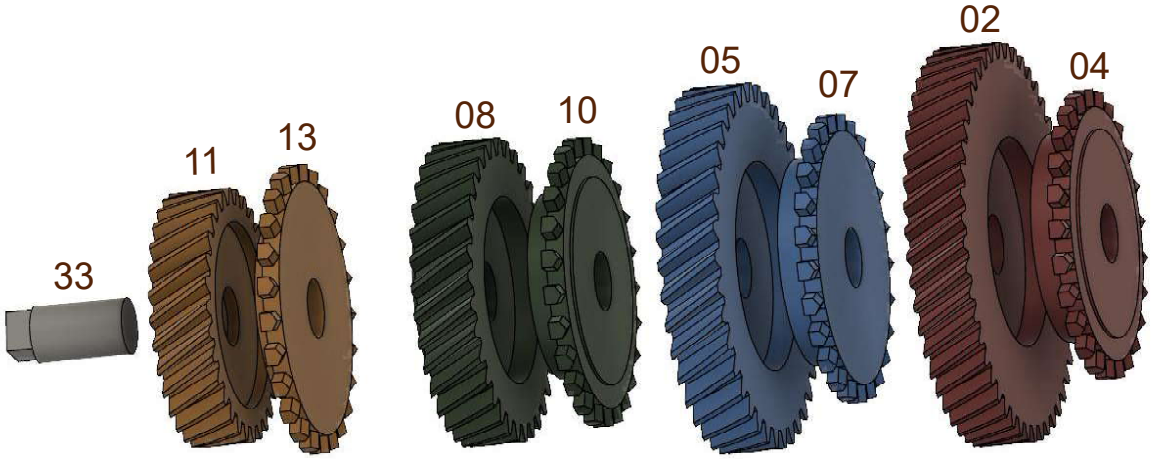

Glue each of the Gear Faces (13, 10, 07, 04) to their respective Gears (11, 08, 05, 02)

Glue the Input Shaft (33) to 4th Gear A (11)

4. Assemble the Reverse Gear

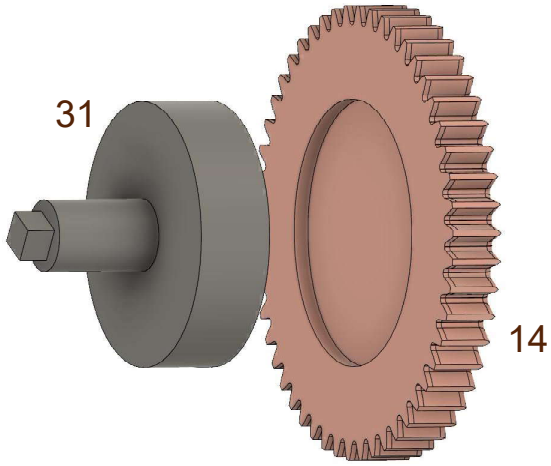

Glue the Reverse Gear Hub (31) to Reverse Gear A (14)

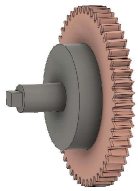

5. Assemble the Output Shaft

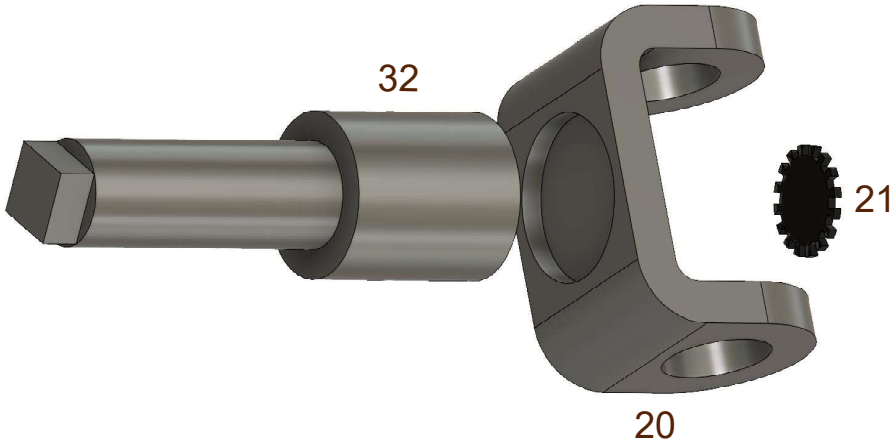

Glue the Output Shaft (32) and the Yoke Splined Cap (21) to the Yoke (20)

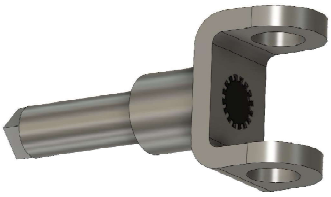

6. Mount the Shift Cradle

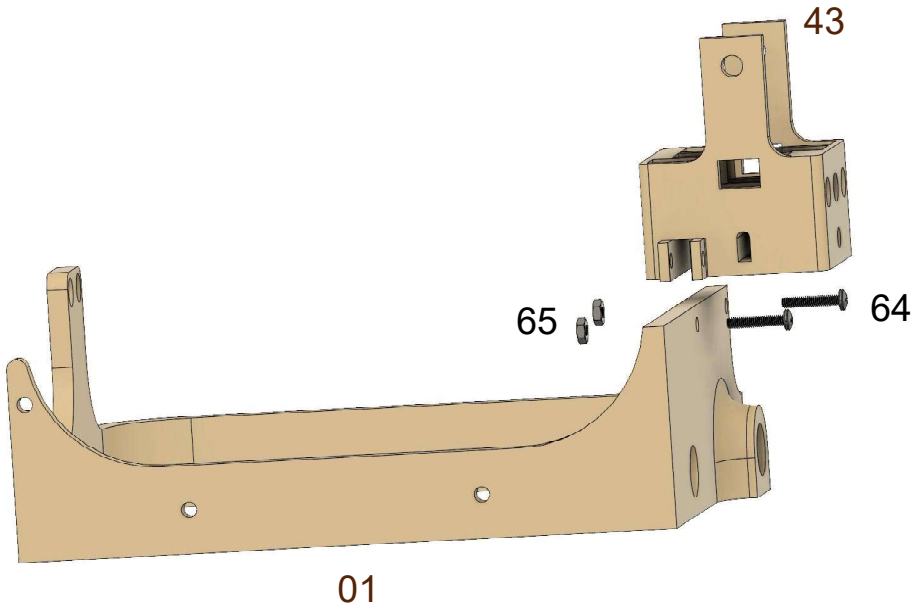

Mount the Shift Cradle (43) to the Housing (01) using 2 Machine Screws (64) and 2 Hex Nuts (65)

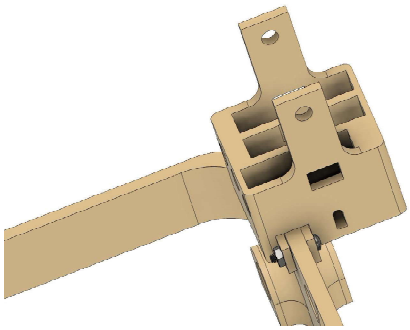

7. Mount the Countershaft

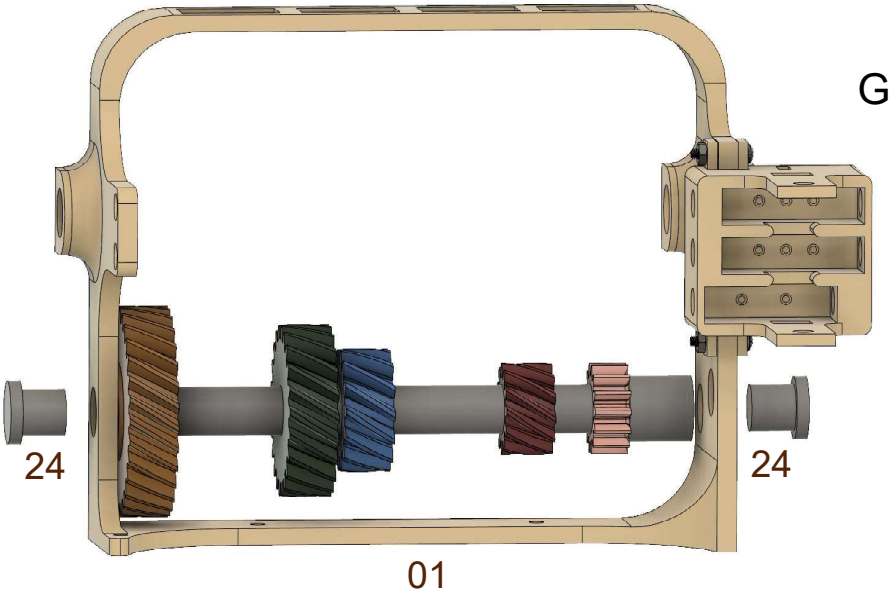

Mount the Countershaft Gearcluster assembled in Step 1 to the Housing (01) using the Countershaft Caps (24)

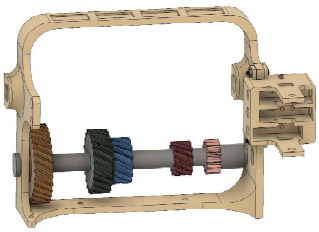

8. Mount the Input Shaft

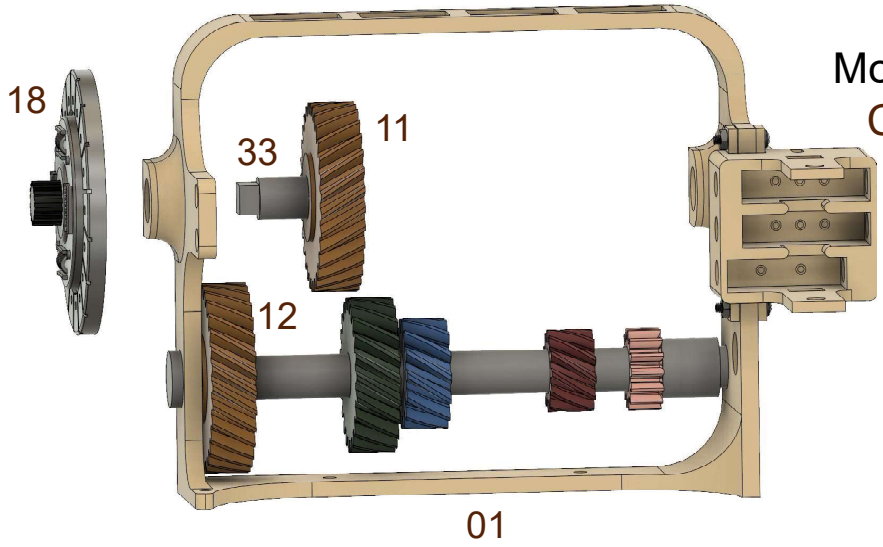

Mount the Input Shaft (33) to the Clutch Plate (18) through the Housing (01)

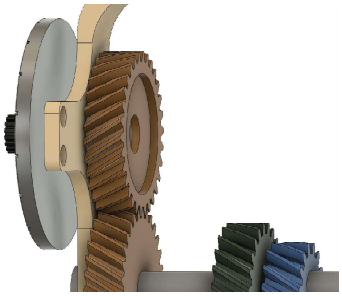

4th Gear A (11) and 4th Gear B (12) should mesh

9. Assemble the Synchronous Hubs

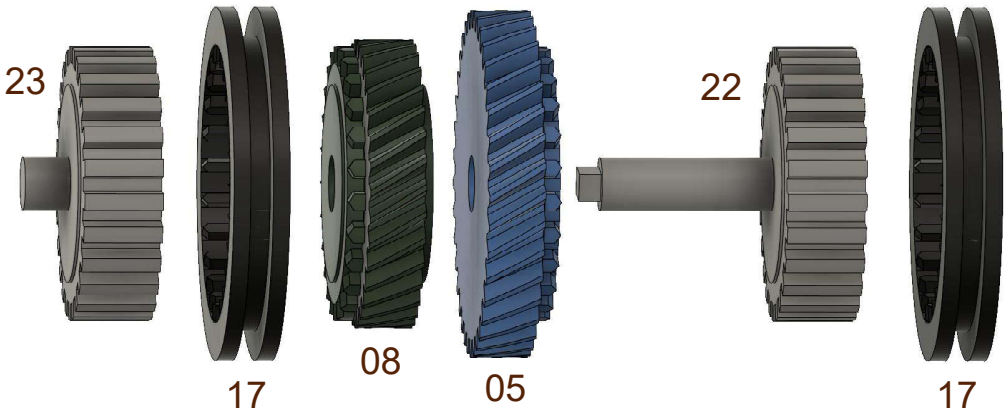

Assemble the Synchro Hubs (23, 22), the Shift Sleeves (17), and the 3rd and 2nd Gear A assemblies (08, 05) from Step 3 into a stack

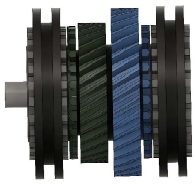

10. Mount the Synchronous Hubs

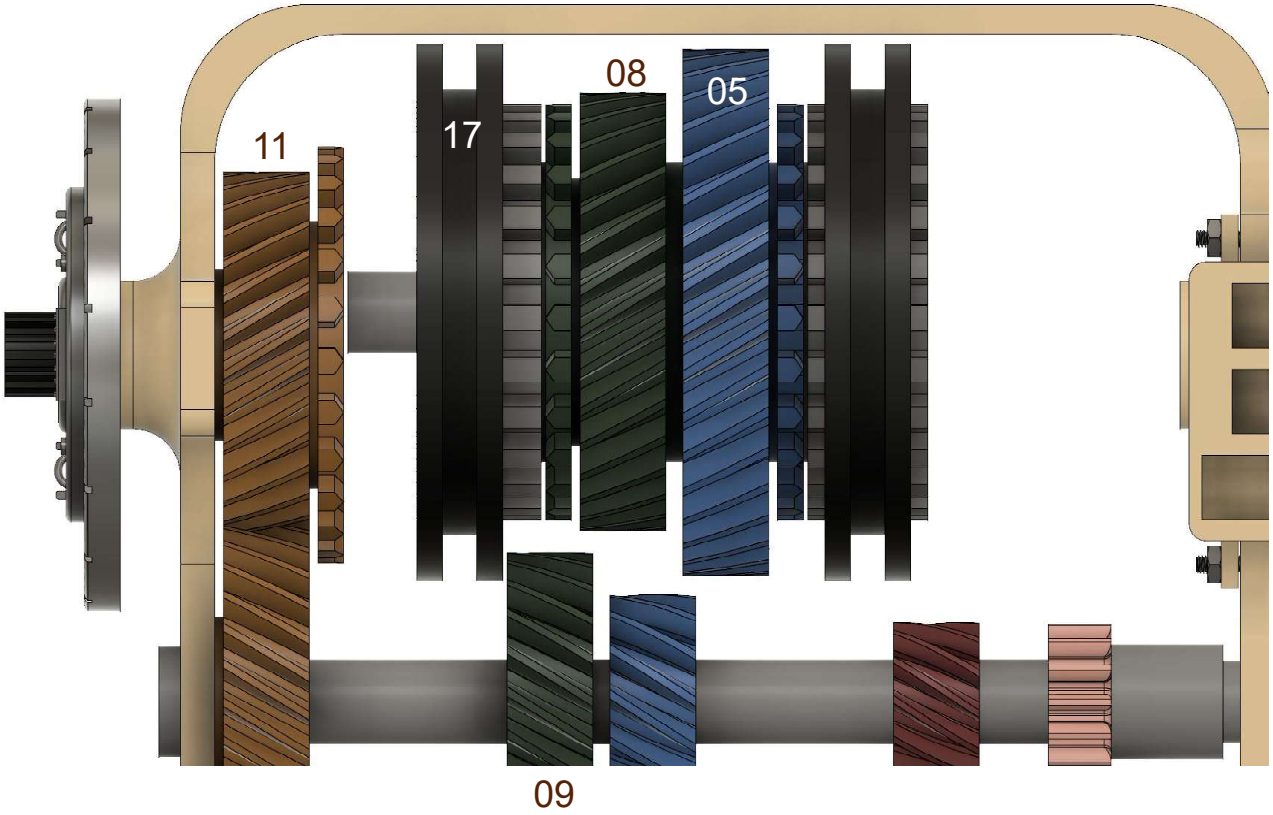

Slide the Shift Sleeve (17) forward - to clear 3rd Gear B (09) - and mount the assembled stack from Step 9 to 4th Gear A (11) meshing 3rd Gear A (08) and 2nd Gear A (05) with their Countershaft partners

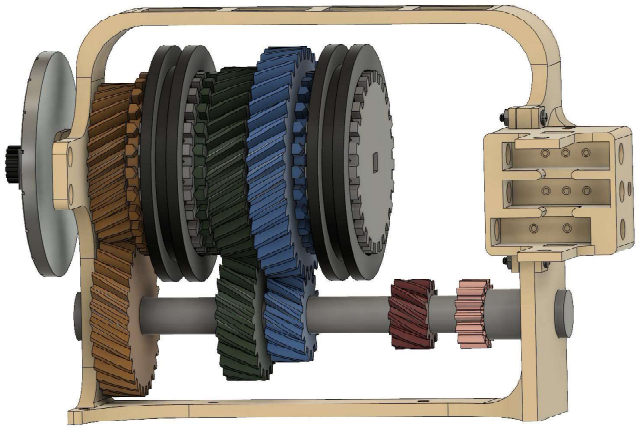

11. Assemble the Reverse Selector Sleeve

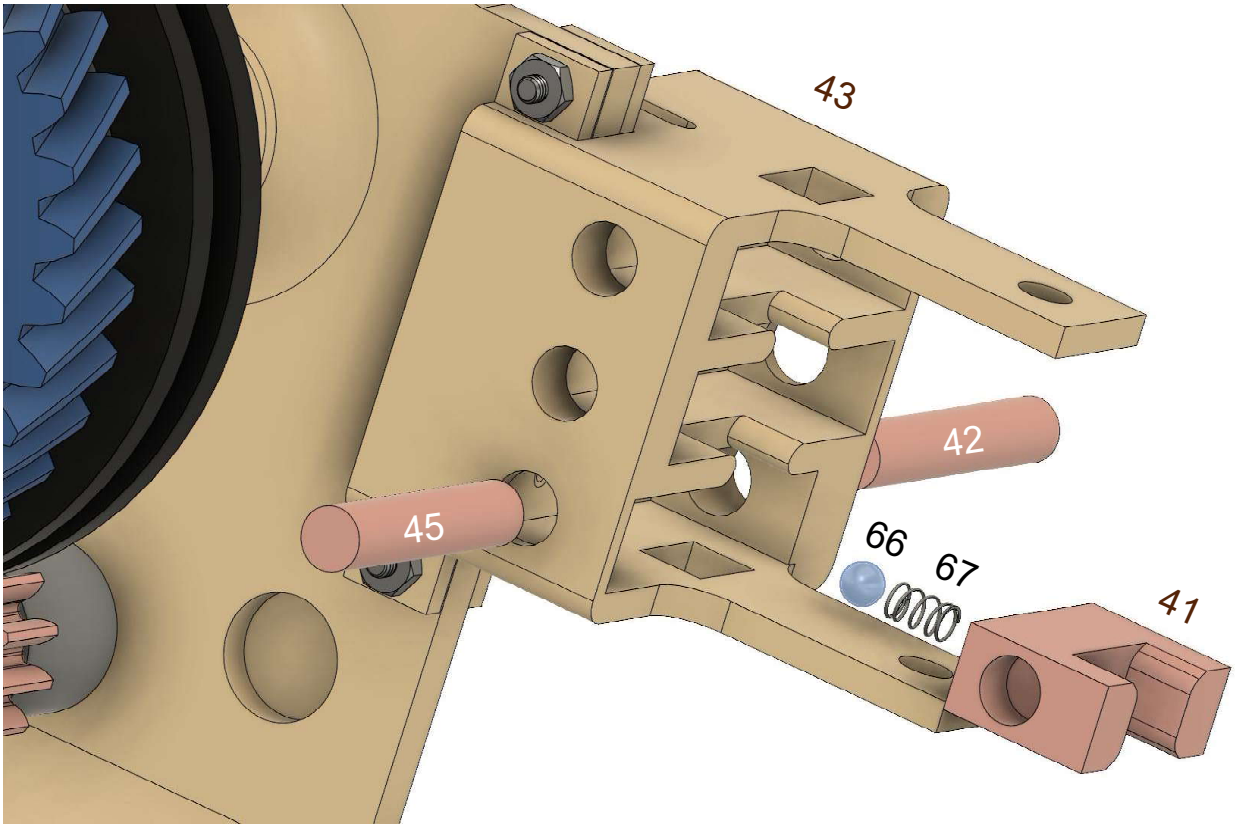

Do not Glue

Insert a Spring (67) and Bearing Ball (66) into the hole on the bottom of the Selector Sleeve (41) and trap them against the Shift Cradle (43) by inserting the Reverse Shift Shaft (45) and Shaft End (42) through the Cradle and into the Sleeve

The Selector Sleeve (41) should move freely from one detent to the other. If it does not, check that the spring and bearing ball are properly seated

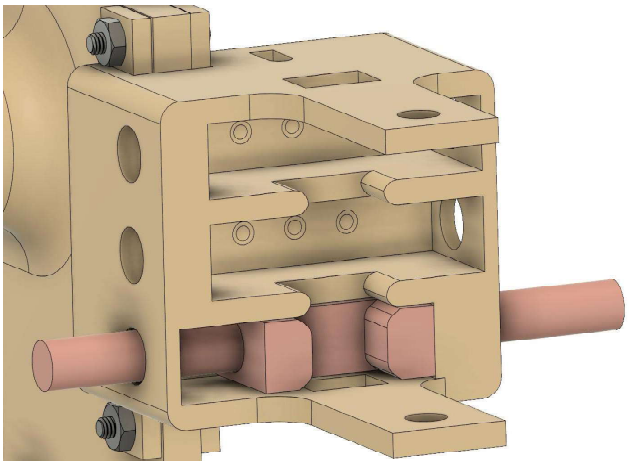

12. Assemble the 1-2 Selector Sleeve

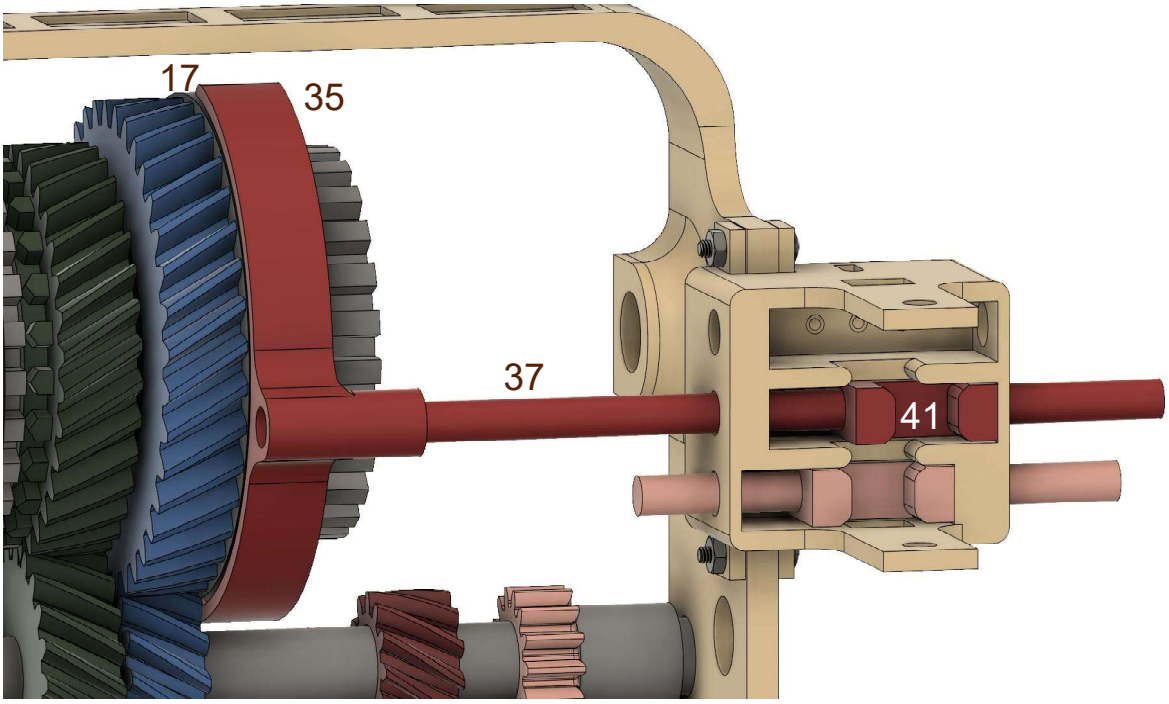

Repeat Step 11 with 1-2 Shift Shaft B (37), another Shaft End, Selector Sleeve, Spring, and Bearing Ball

Do not Glue

With the 1-2 Selector Sleeve (41) and its Shift Sleeve (17) in the positions shown (as far apart as they can be), mount the 1-2 Fork (35) onto the Sleeve and finesse the Fork onto the end of 1-2 Shift Shaft B (37)

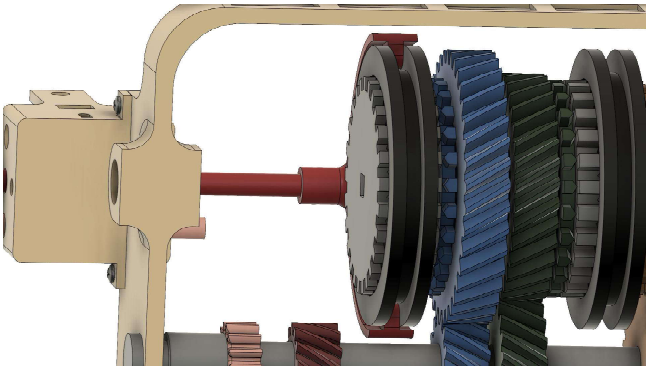

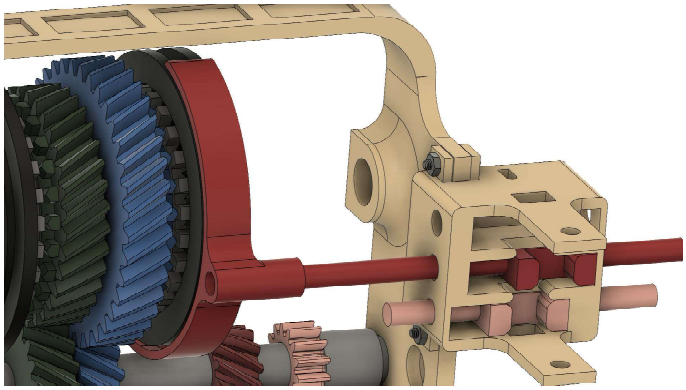

13. Assemble the 3-4 Selector Sleeve

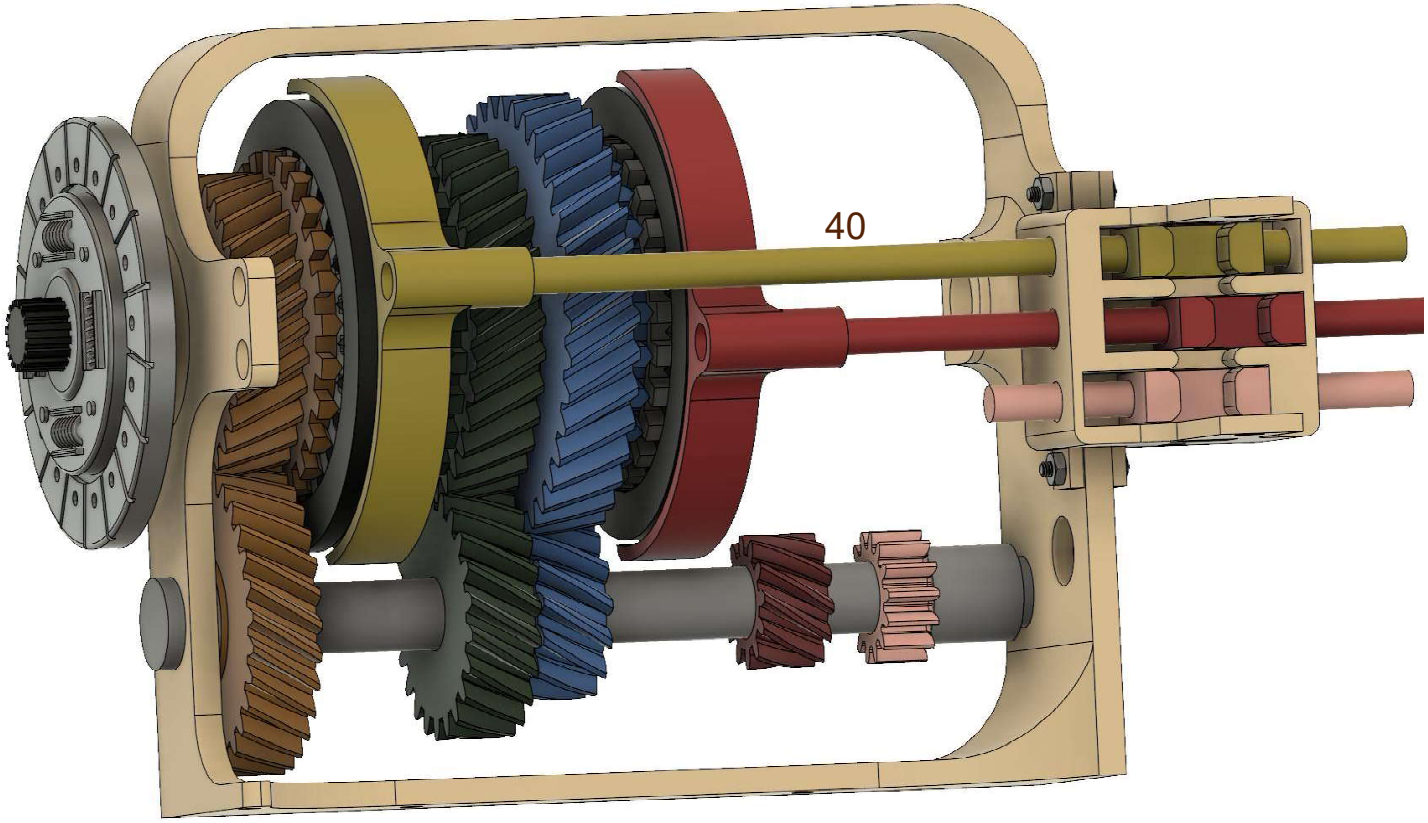

Do not Glue

Mount 3-4 Shift Shaft B (40), another Shaft End, Selector Sleeve, Spring, and Bearing Ball onto the Shift Cradle

Do not Glue

Mount the 3-4 Fork (38) onto its Sleeve and press the Fork onto the end of 3-4 Shift Shaft B (40). Insert 3-4 Shift Shaft A (39) and 1-2 Shift Shaft A (36) through the Housing and into their Forks

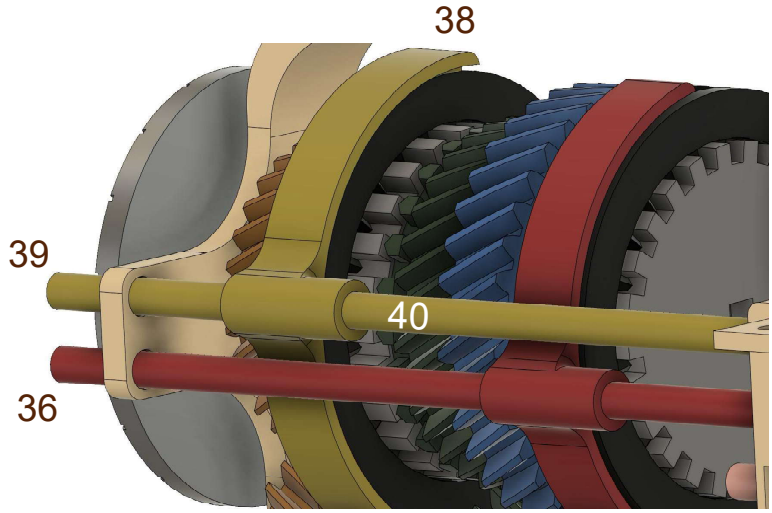

14. Mount the Remaining Main Shaft Gears

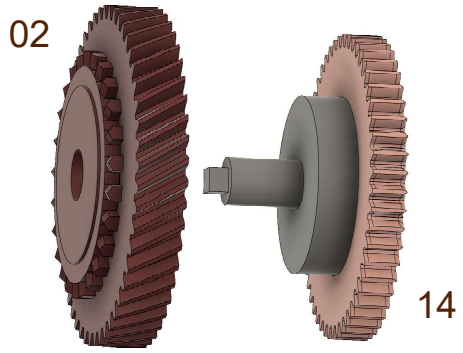

Do not Glue

Stack the 1st Gear A and Reverse Gear A assemblies (02,14)

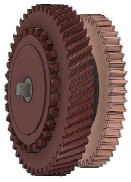

Do not Glue

Mount the stacked assemblies to the back of the 1-2 Synchro Hub (22), meshing 1st Gear A (02) with 1st Gear B (03)

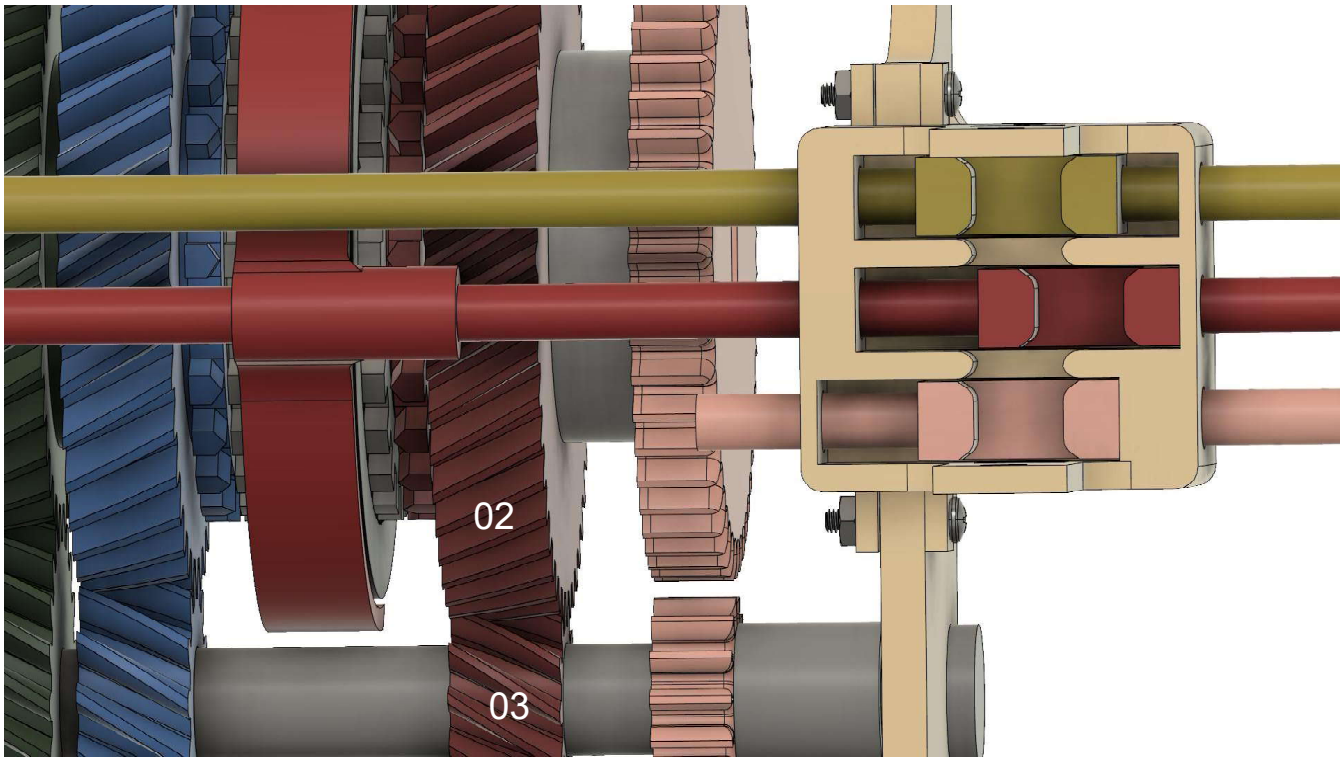

15. Mount the Output Shaft

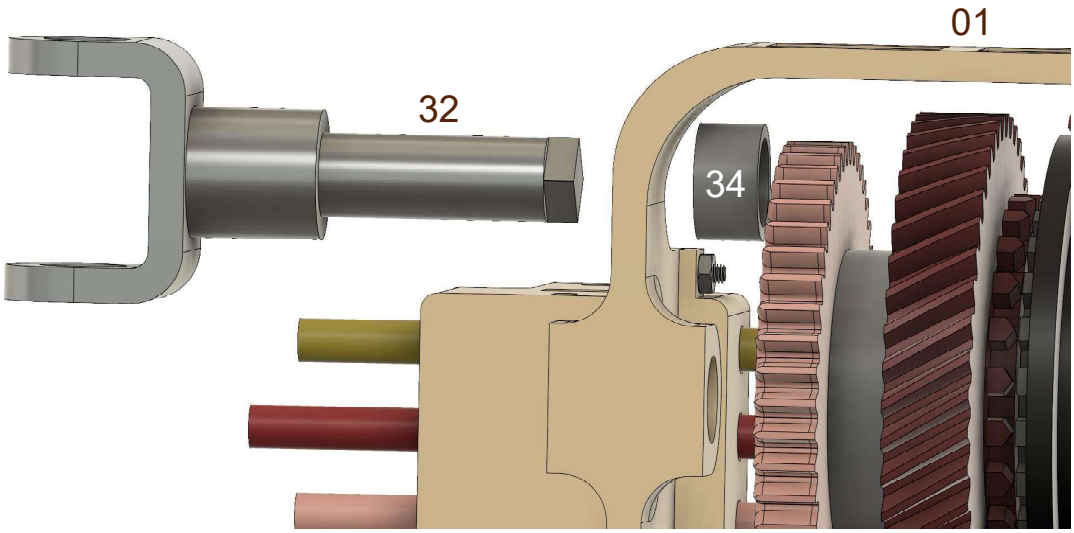

Mount the Output Shaft (32) to the Reverse Gear A (14) assemby through the Housing (01) and the Mainshaft Spacer (34)

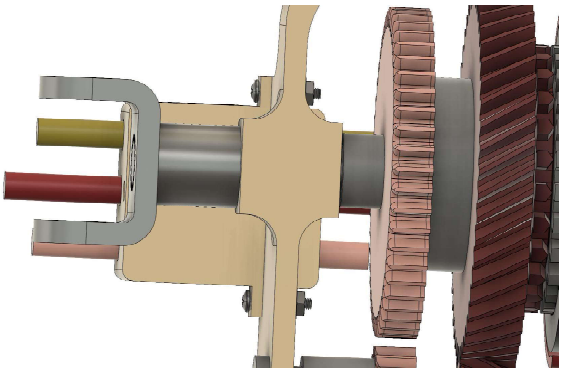

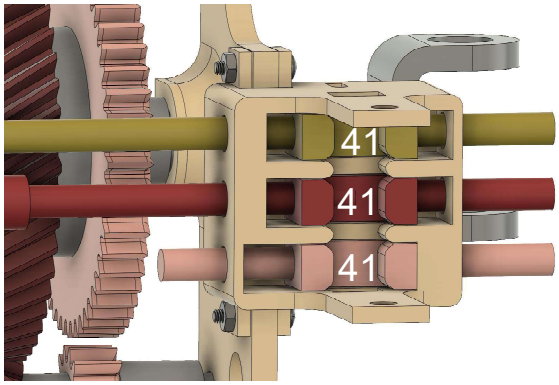

With the Selector Sleeves (41) in their neutral (centered) positions, the Clutch Plate and the Yoke should rotate independently of each other

16. Assemble the Reverse Idler Gear

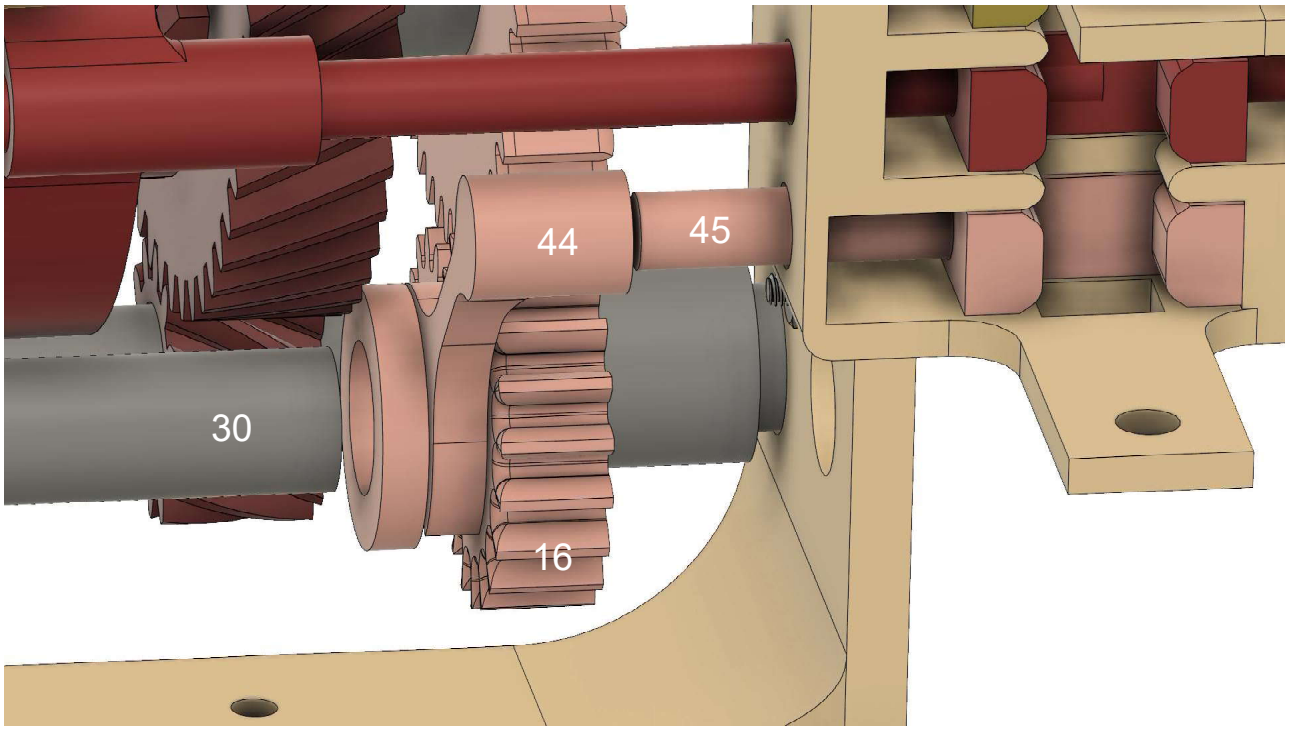

Slide the Reverse Fork (44) onto the collar of the Reverse Idler Gear (16), and mount the Reverse Shaft (30) to the Housing through the Idler Gear, ensuring that the trio of gears in the Reverse Gear Train mesh. Press fit the Reverse Fork onto the Reverse Shift Shaft (45)

When satisfied with the fit, **glue** the Reverse Shaft (30) into place on the Housing.

Do not get glue on the Idler Gear or Reverse Fork

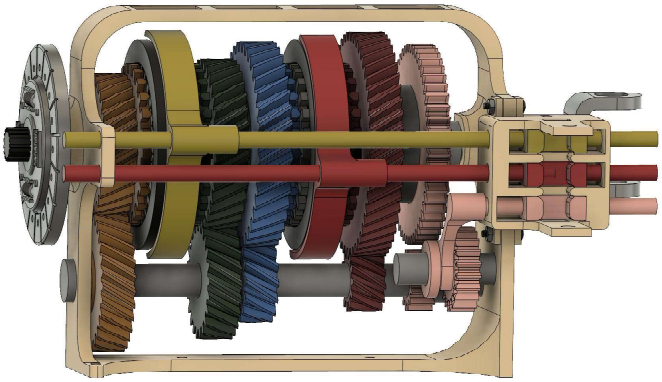

17. Assemble the Shift Guard

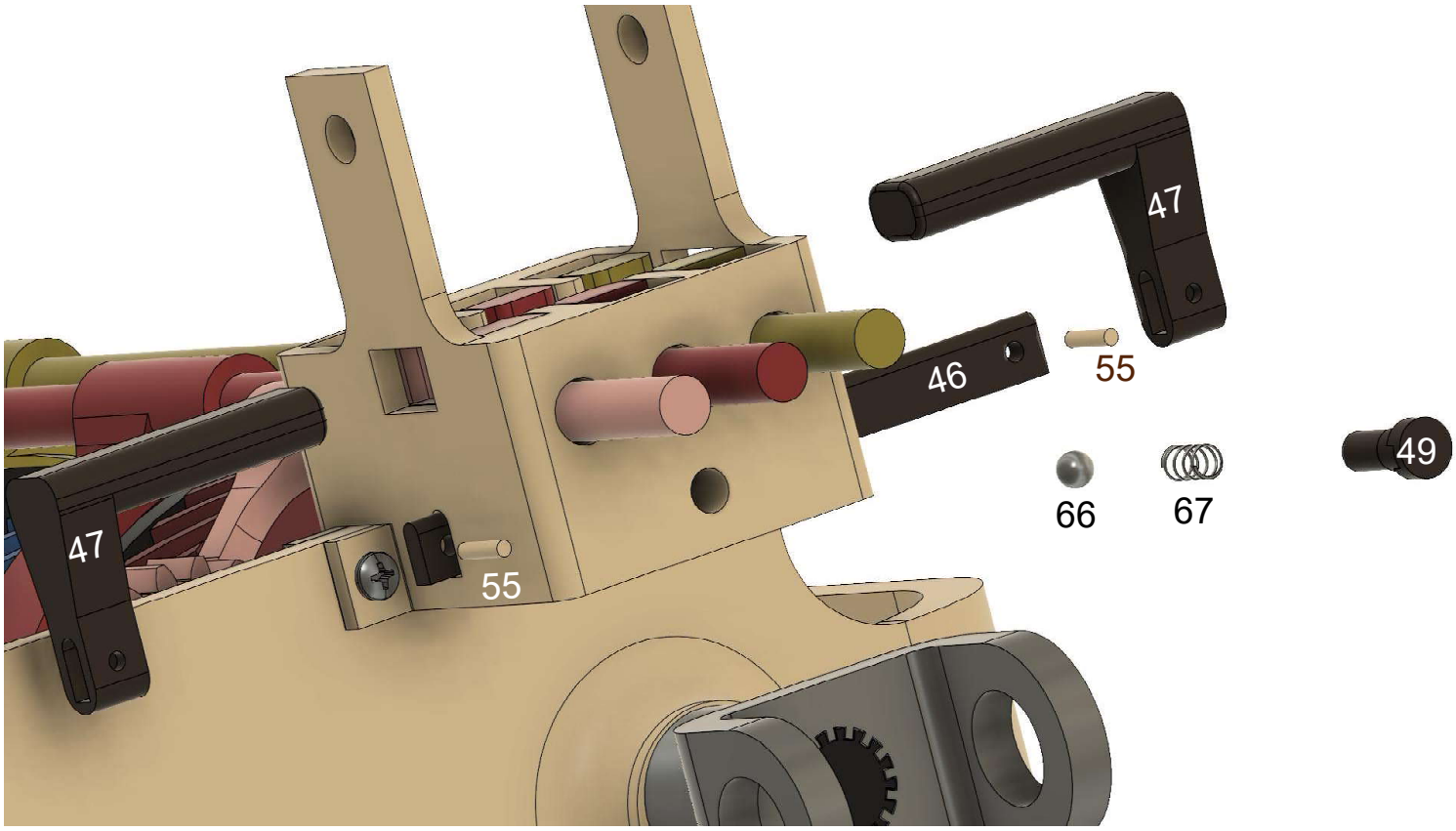

Do not Glue

Slide the Guard Rail (46) through the Shift Cradle, and secure it to the Guards (47) using two Guard Pins (55)

Do not Glue

Insert a Bearing Ball (66) and Spring (67) into the Cradle, and seat them with the Spring Plug (49)

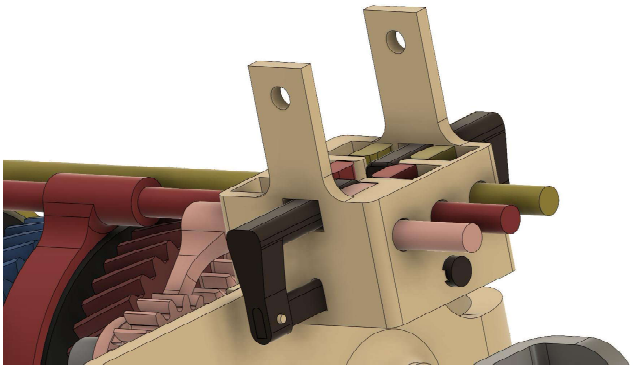

18. Assemble the Striker Rod

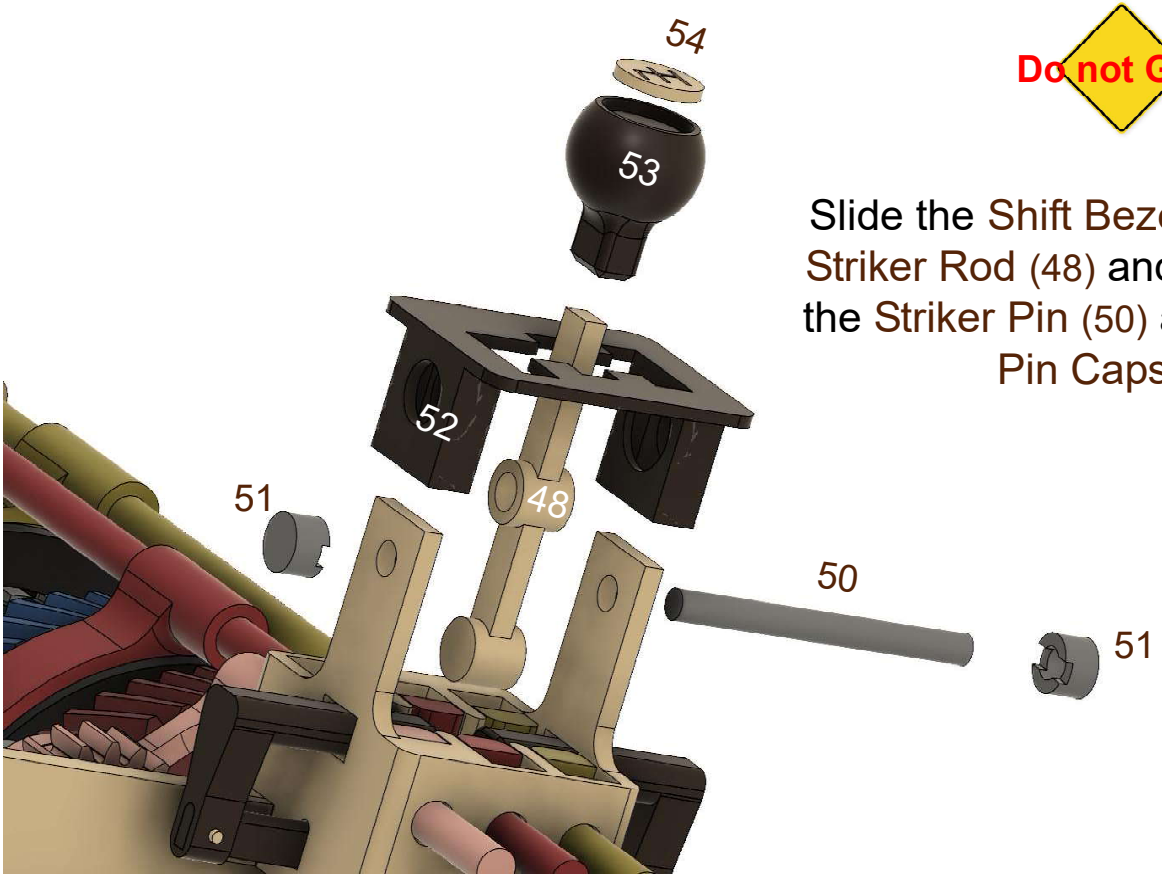

Slide the Shift Bezel (52) over the Striker Rod (48) and secure it with the Striker Pin (50) and two Striker Pin Caps (51)

Glue the Shift Knob Cap (54) onto the Shift Knob (53). Ensure that the Cap's orientation is correct by dry-fitting it first. Then slide the Knob assembly onto the Striker Rod (48)

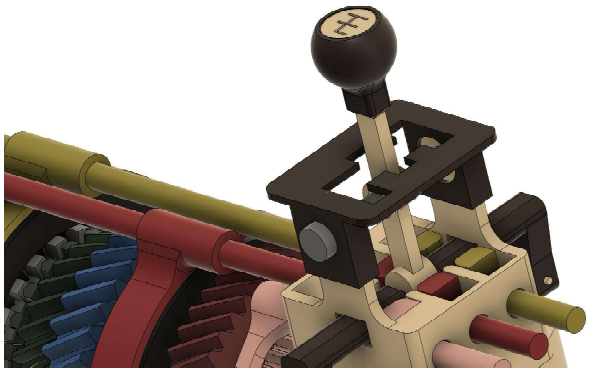

19. Assemble the Number Tiles

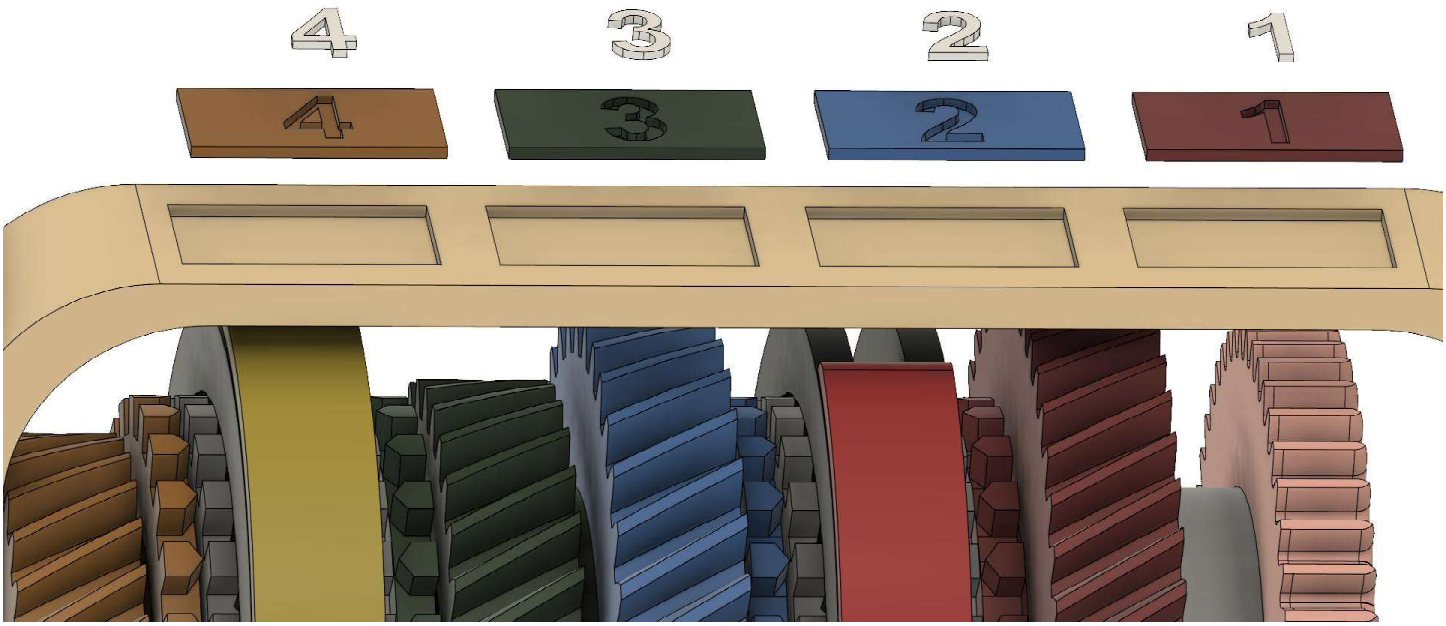
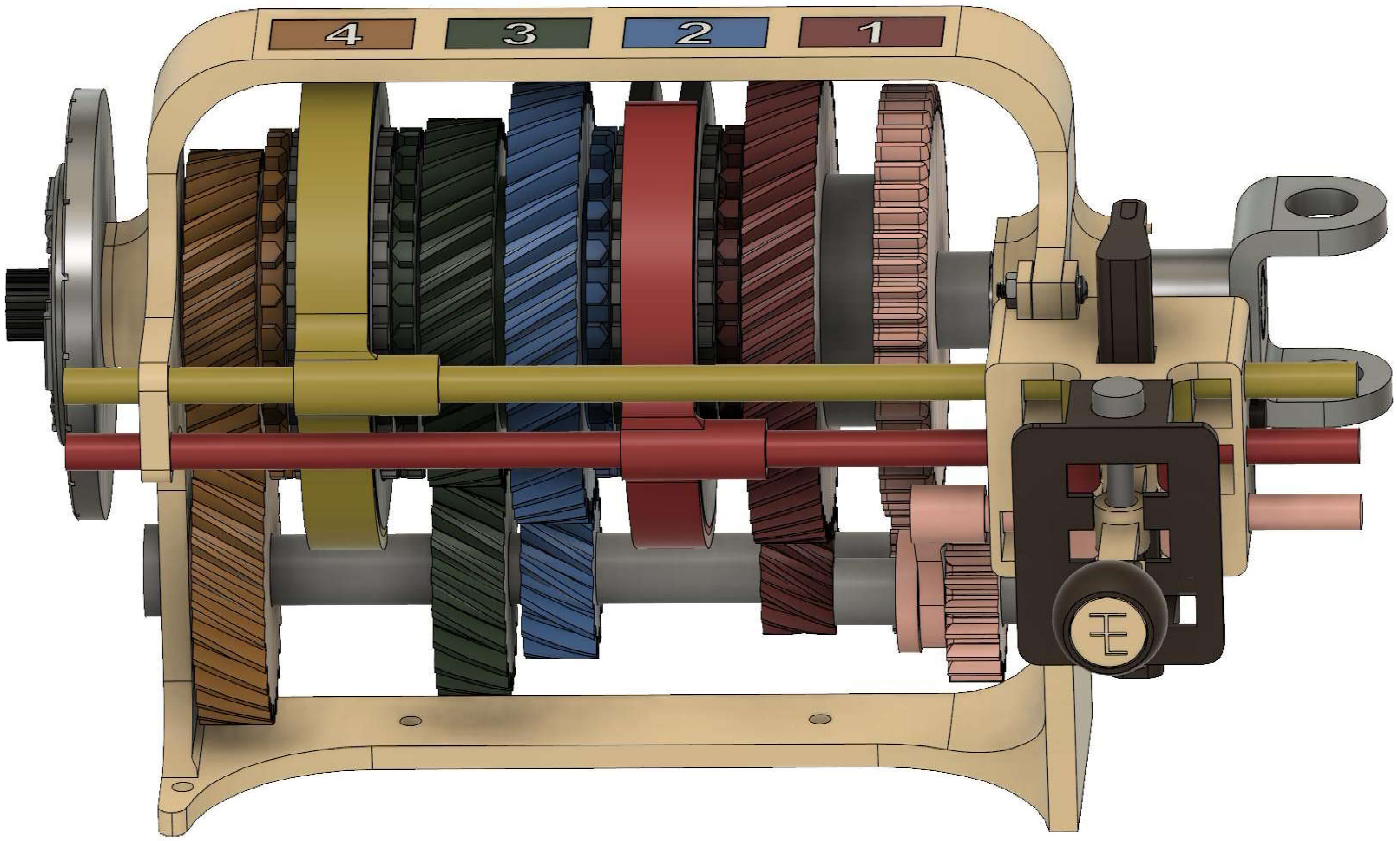
Glue the Numerals (59, 58, 57, 56) and Tiles (63, 62, 61, 60) into place